Door Lock Control (RHD)

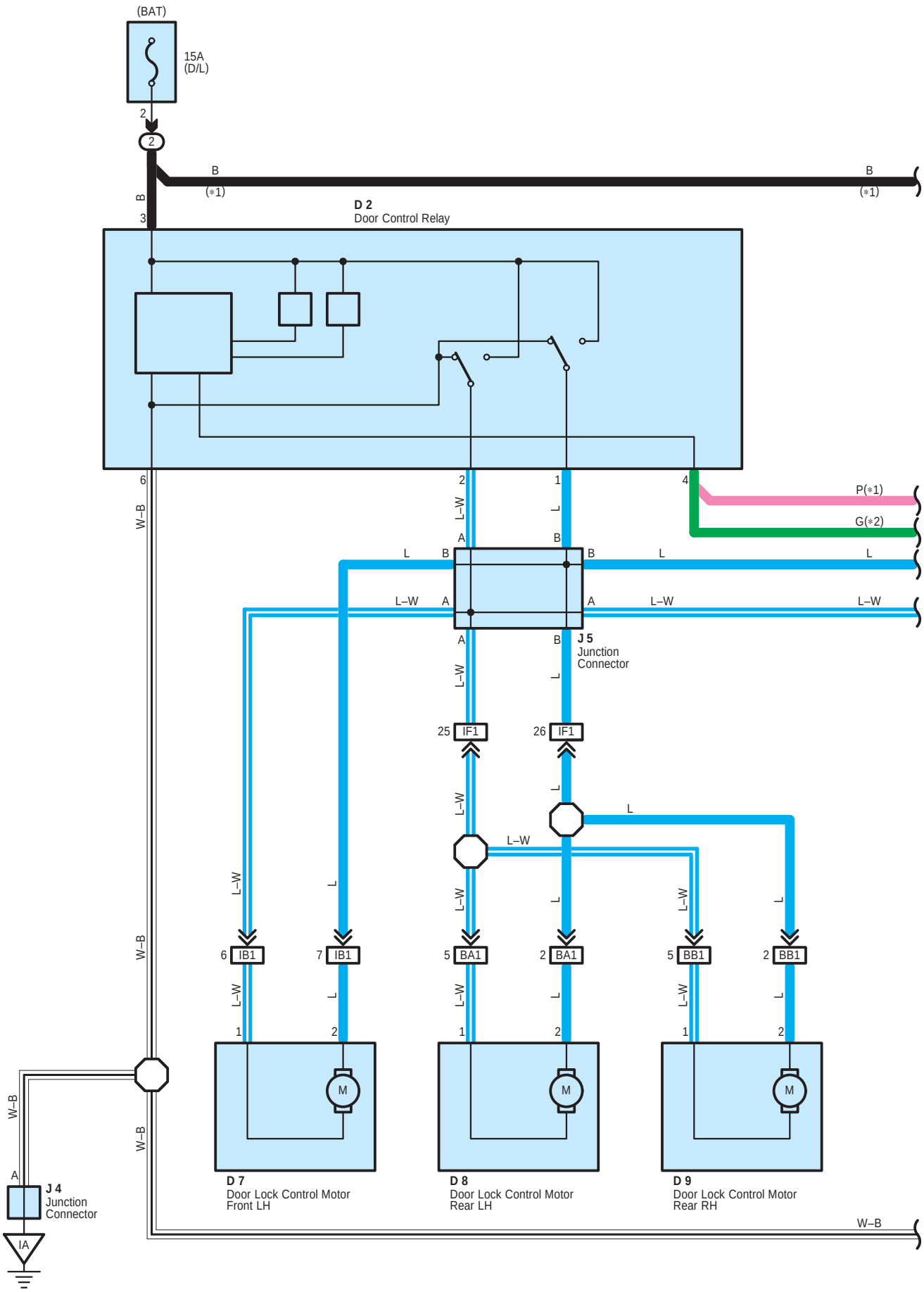

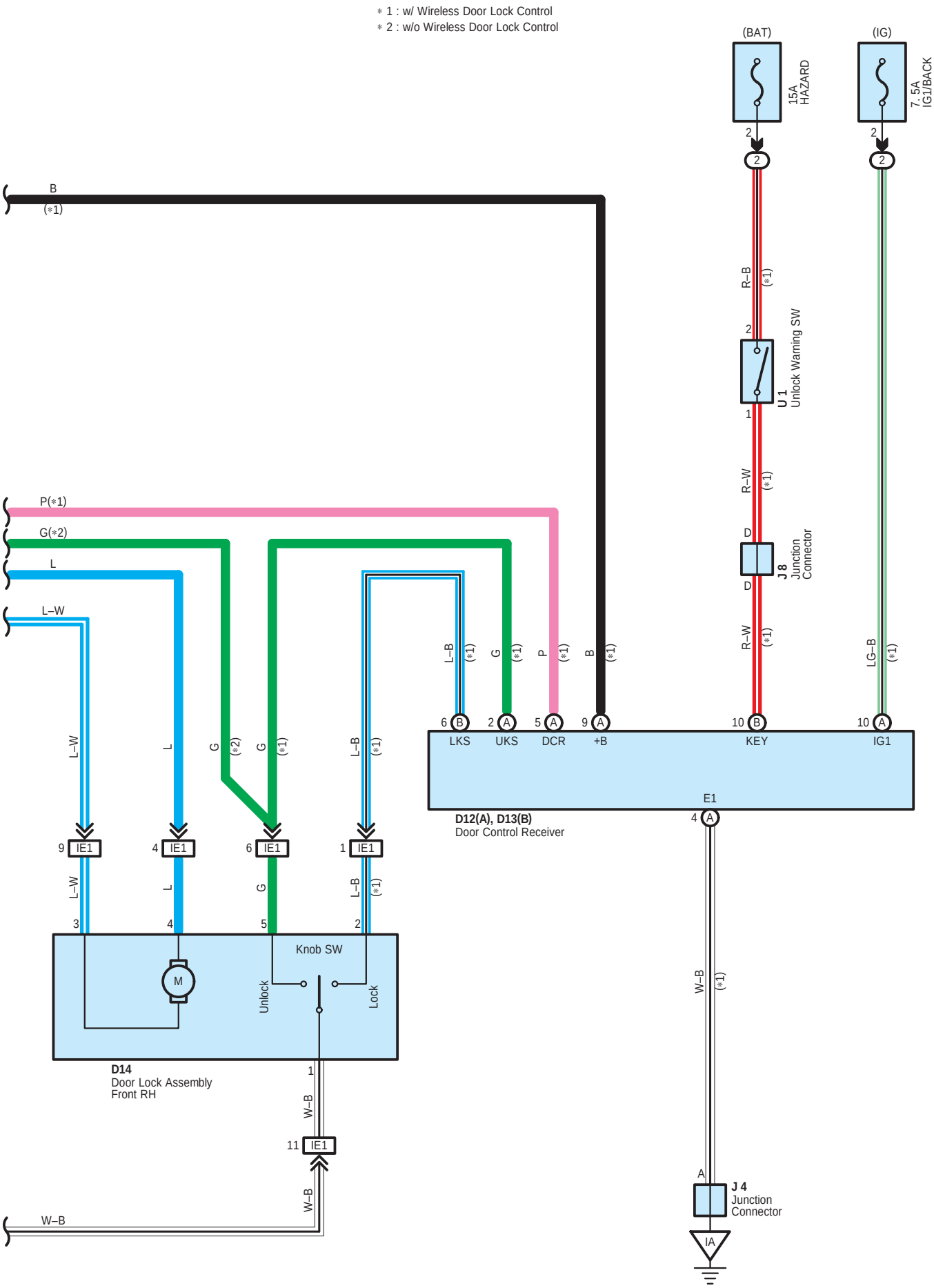
∗1 : w/ Wireless Door Lock Control
∗2 : w/o Wireless Door Lock Control
(BAT)
(IG)
15A HAZARD
7. 5A IG1/BACK
B (∗1)
R–B (∗1)
U 1 Unlock Warning SW
R–W (∗1)
J 8 Junction Connector
R–W (∗1)
LG–B (∗1)
P(∗1)
G(∗2)
L
L–W
L–B (∗1)
G (∗1)
P (∗1)
B (∗1)
LKS
UKS
DCR
+B
KEY
IG1
E1
D12(A), D13(B)
Door Control Receiver
IE1
L–W
L
G (∗2)
G (∗1)
L–B (∗1)
Knob SW
M
Unlock
Lock
D14
Door Lock Assembly
Front RH
W–B
W–B (∗1)
J 4
Junction Connector
IA
W–B

Door Lock Control (RHD)

System Outline

1. Manual Lock Operation

When the driver's side door lock knob SW is operated to LOCK position, a lock signal is input to TERMINAL (B) 6 of the door control receiver to TERMINAL (A) 5 to TERMINAL 4 of the door control relay (w/ wireless door lock control) or TERMINAL 4 of the door control relay (w/o wireless door lock control) and causes the door control relay to function. The current flows from TERMINAL 3 of the door control relay to TERMINAL 2 to the door lock motors to TERMINAL 1 of the door control relay to TERMINAL 6 to GROUND and the door lock motors locks the door.

2. Manual Unlock Operation

When the driver's side door lock knob SW is operated to UNLOCK position, an unlock signal is input to TERMINAL (A) 2 of the door control receiver to TERMINAL (A) 5 to TERMINAL 4 of the door control relay (w/ wireless door lock control) or TERMINAL 4 of the door control relay (w/o wireless door lock control) and causes the door control relay to function. The current flows from TERMINAL 3 of the door control relay to TERMINAL 1 to the door lock motors to TERMINAL 2 of the door control relay to TERMINAL 6 to GROUND and the door lock motors unlocks the door.

: Parts Location

Code	See Page	Code		See Page	Code	See Page
D2	36 (*5)	D12	A	36 (*5)	J5	37 (*5)
	38 (*6)	D13	B	36 (*5)		39 (*6)
D7	40 (RHD)	D14		40 (RHD)	J8	37 (*5)
D8	40 (RHD)	J4		37 (*5)	U1	37 (*5)
D9	40 (RHD)			39 (*6)		

: Relay Blocks

Code	See Page	Relay Blocks (Relay Block Location)
2	23 (RHD)	Fuse Block (Right Kick Panel)

: Connector Joining Wire Harness and Wire Harness

Code	See Page	Joining Wire Harness and Wire Harness (Connector Location)
IB1	48 (*5)	Front Door LH Wire and Instrument Panel Wire (Left Kick Panel)
	49 (*6)	
IE1	48 (*5)	Front Door RH Wire and Instrument Panel Wire (Right Kick Panel)
	49 (*6)	
IF1	48 (*5)	Instrument Panel Wire and Floor Wire (Right Kick Panel)
	49 (*6)	
BA1	50 (RHD)	Rear Door No.1 Wire LH and Floor Wire (Center Pillar LH)
BB1	50 (RHD)	Rear Door No.1 Wire RH and Floor Wire (Center Pillar RH)

: Ground Points

Code	See Page	Ground Points Location
IA	48 (*5)	Left Kick Panel
	49 (*6)	

* 1 : LHD 3SZ–VE * 2 : LHD K3–VE * 3 : RHD 3SZ–VE * 4 : RHD K3–VE * 5 : RHD w/ Heater * 6 : RHD w/o Heater